„Solar generators and islanding“

A danger for human and machine

The relating standards:
IEC/EN 50530
IEC/EN 62116
VDE 0126-2
IEEE 1547
and many manufacturers test specifications

During normal operation the solar inverter supplies the load which is regularly supplied by the public network. Depending on the amount of generated energy either the solar inverter delivers energy into the public network or the public network delivers energy to the connected loads.
During all operating modes each connected component must comply to the specifications stated in IEEE1547. To test solar inverters in a suitable way the connection between inverter and public network shall be simulated.
A desired simulator like the PVS Series from Spitzenberger & Spies must be able to generate irregular interconnection situations and conditions for testing the inverters according to realistic conditions and to verify their conformity.

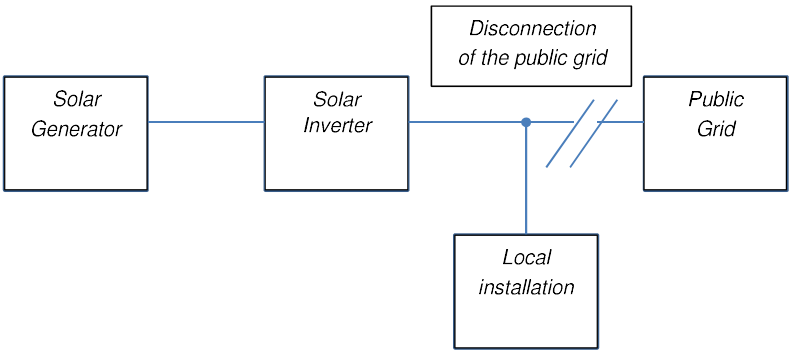

Fig. 1: Schematic diagram of islanding

One of the possible problems is a disturbance or interruption of the connection between the public grid and the connected solar inverter.

This heavy disturbance is called „Islanding“.

Islanding is a situation when the connection to the public network is interrupted or the public network has been switched off. Interaction between the local generators and the connected loads causes then the islanding effect and affects the solar inverter a running public grid.

The main problems during islanding are:

1. The public power distributors can no longer control and influence voltage and frequency in the distribution network. Inside the islanding system deviation of voltage and frequency can cause malfunction and/or damage of the local connected loads.
2. Injury of operating personnel can be caused when the public grid is cut off for maintenance. The personnel has the opinion of a voltage free network whilst the solar generator still delivers energy and is setting the local islanding grid still under voltage.

CHECKING ANTI-ISLANDING FUNCTIONS

The **IEC/EN 62116** is preventing humans and machines from injury and damage. **It defines test specifications and methods for solar inverters to check their ability to avoid the islanding effect.**

Practically each solar inverter must have an anti-islanding function which cuts off the connection between inverter and the local grid on error condition. The local grid status is set voltage free.

Testing equipment according to IEC/EN 62116

1. *Waveform recorder and power analyzer*
2. *DC source simulating a realistic photovoltaic source*
3. *AC source simulating the public grid*
4. *AC loads – combined RLC load*

The IEC/EN 62116 defines an explicit test of this anti-islanding function.
The optimal DC source for those tests is a PV simulator complying to the IEC/EN 50530.
The PV Simulator series **PVS from Spitzenberger & Spies** complies to all necessities for DC source as defined in the IEC/EN 50530 and also in the IEC/EN 62116.

SIMULATION OF THE SUPPLY NETWORK – GRID SIMULATION

For the AC voltage source for the simulation of the public grid requirements for voltage and frequency stability and harmonic distortion are defined. When using the Spitzenberger & Spies Basic EMC System as the AC voltage source all requirements can be fulfilled fully compliant.
Furthermore disturbances of the public grid as well as voltage fluctuations and frequency variations can be simulated and monitored. With this programmable source global products can be tested also (with different national voltage and frequency specifications).

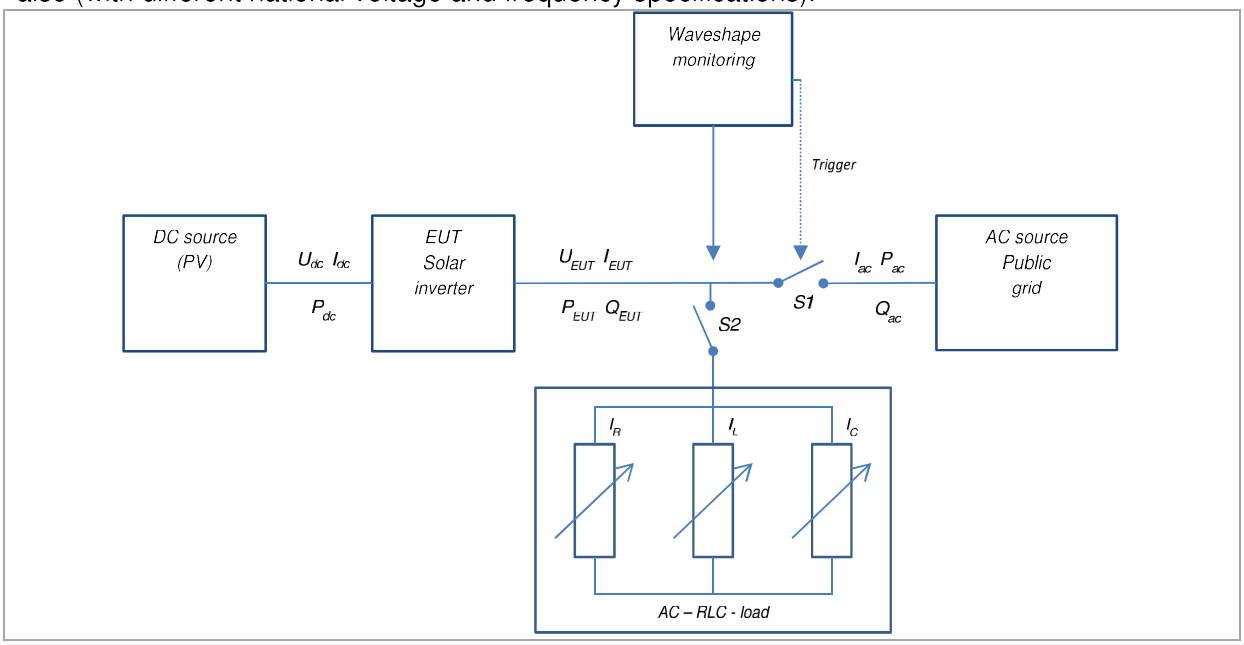

Fig. 2: Test setup for the IEC/EN 62116

RLC LOAD AS A POWER RESONANT CIRCUIT

To establish a realistic environment for this testing a typical AC load as a combination of R, L and C is defined in the standard.

The RLC load shall be adjusted according to the output power capability of the respective inverter and shall be in resonance condition at the nominal frequency.
The quality Q_f of the RLC load (calculated according to IEC/EN 62116) shall be adjusted to 1,0 +/- 0,05. When carrying out the different test procedures the RLC load has to be adjusted accordingly.

Three test conditions are defined for testing:

- *A: P_{EUT} 100%*
- *B: P_{EUT} 50%*
- *C: P_{EUT} 25%*

The three test conditions A, B and C are adjusted via changing of the EUT input voltage to 90%, 50% und 10% of the nominal voltage. As a first step the RLC load is adjusted so, that the fundamental frequency components of the active and the reactive power as well as the fundamental frequency component of the current flow through the connection switch is set to zero. The RLC load is now a parallel resonant circuit in resonance.

To start the test the connection switch to the public grid is opened.

For the test condition A the RLC load's active and reactive power have to be adjusted according to the adjacent table.

Percental change of the active load, reactive load from the nominal values		
-5,+5	*0,+5*	*+5,+5*
-5,0		*+5,0*
-5,-5	*0,-5*	*+5,-5*

Table for test condition A

For the test conditions B and C it is enough, to adjust only the reactive load (either L or C) at a constant active load.
For the evaluation the run-on time t_R is measured, the amount of time that an unintentional island condition exists. Run-on time is defined as the interval between the opening of the switch S1 (connection to the public grid) and the cessation of the EUT output current.
For all combinations stated in the test conditions A, B and C the run-on time t_R is now measured. If the run-on time exceeds the maximum value (as stated in the according specifications of power distributors or national standards) the EUT's test failed.

Taking all the requirements for the RLC load according to IEC/EN 62116 into consideration a complex profile of necessities for the test system arises.

RLC LOAD - USEFUL EXTENSION AND OPTION OF THE TEST SYSTEM

Spitzenberger & Spies has developed an optional RLC load unit for the PV simulator series PVS. This RLC unit complies to all requirements according to IEC/EN 62116. In conjunction with complying measurement units like digital oscilloscopes and power analyzers a complete test according to IEC/EN 50530 and IEC/EN 62116 can be carried out.
A convenient software package for running the tests and for documentation completes the PVS simulator system

The following diagram shows a schematic overview of such a test system:

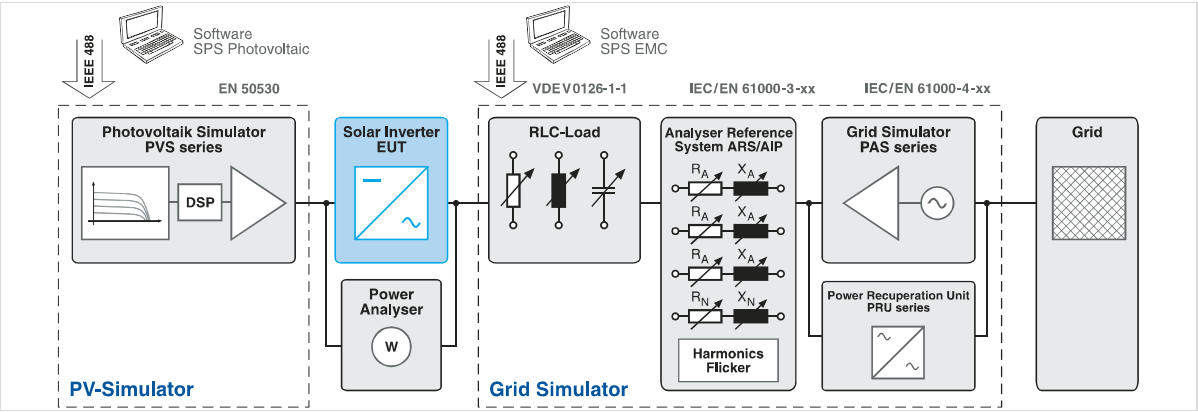

With a complete test system from Spitzenberger & Spies compliant testing can be done not only in photovoltaic area, it is (as the basic emc system) the best solution also for fully compliant testing according to emission (IEC/EN 61000-3-xx) and immunity (IEC/EN 61000-4-xx) standards.

MANY POSSIBILITIES FAR BEYOND THE STANDARDS

Looking at the PV simulator side, the input of the solar inverter can be supplied with arbitrary solar panel characteristics and irradiation changes from any point of the earth. The PVS simulator just has to be programmed with this data files with the Spitzenberger & Spies software. Realistic weather and panel situations from anywhere can be simulated easily in laboratory environment.

On the other hand, the solar inverter's output is connected to the Spitzenberger & Spies Basic EMC system, a grid-simulator with arbitrary functions, which is able to simulate each local grid from any power distributor worldwide. This grid-simulator can not only simulate a stable network, it can perform also many disturbances like voltage drops and voltage variations, frequency variations, unbalances and many more, as described in the IEC/EN 61000-4 series standards.